Nidec PRESS & AUTOMATION / MINSTER

PM4

Precision Straight Side Presses

250-600 Tons Capacity

Product Overview

Minster Series PM4 presses provide the ultimate in consistent accuracy for automated high speed blanking operations in the 250 to 600 ton range.

Valuable lamination dies last longer in a Minster PM4 because of its unique design. The massive frame, full eccentric shaft with six main bearings, along with the heavy iron connections and massive steel wrist pins combine to provide a machine that is more stable at high lamination speeds with reduced punch penetration.

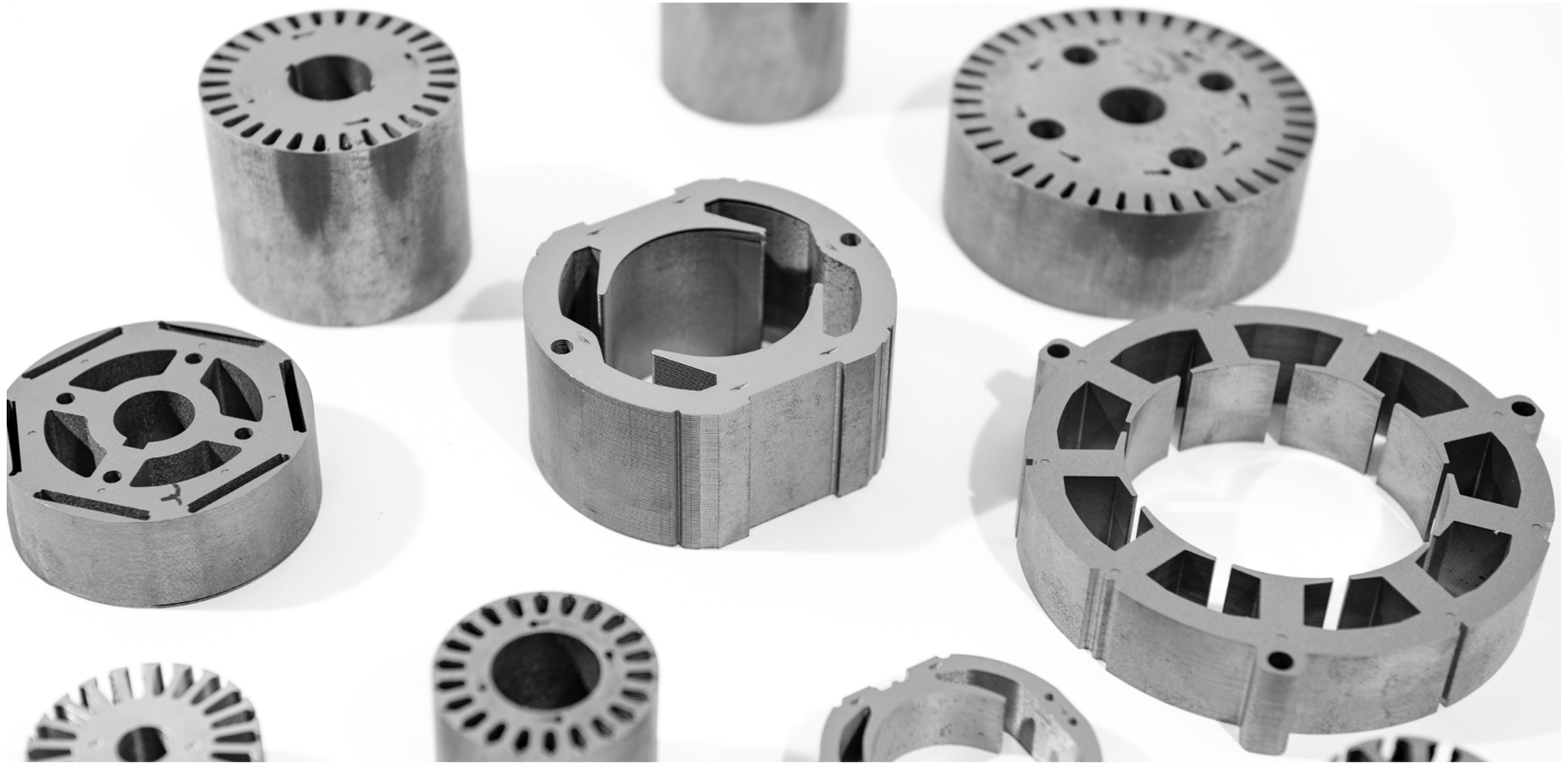

1 **In-Die Staking:** Shutheight stabilization, a deep slide with long gib guiding, hydraulic quick lift slide and consistent slide bottom-dead-center repeatability

2 **Blank High Strength Material at Higher Speeds with Greater Uptime and Die Life:** A reverse load rating (two to four times that of a standard press) and reduced punch penetration as a result of the overall rigidity of the PM4.

3 **Run Both Large and Small Dies on the Same Press:** Designed to handle full tonnage dies that range from 50% to 100% of the die space area. Dies even smaller than 50% of the die area can be run on the PM4 if they require less than full tonnage of its die area.

4 **Utilization of high tensile cast iron** which has over three times the dampening capability of steel to reduce the vibration in the tooling and extend tool life.

5 **Run Progressive Dies with High Off-Center Loading:** Hydrostatic gibbing is used to maintain the parallelism between the PM4 slide and bolster. When subjected to an off-center load, the pressure in the hydrostatic pads automatically adjusts to resist the off-center force.

6 **Inspect and Troubleshoot Dies and Release Jams Faster without Adjusting Shutheight:** The quick lift feature on the PM4 provides the operator with an additional 3" (75 mm) to inspect and troubleshoot the die. In addition, this feature provides a quick method of releasing die jams, eliminating the need for hydraulic tie rod nuts.

Standard Features

Massive Frame Construction

The PM4 boasts a massive four-piece, preloaded frame utilizing high tensile cast iron for the ultimate in vibration and noise dampening. The ultra-low deflection cast bed includes two double walls which reduce front-to-back deflections by 33% over industry standards for general purpose presses. This gives the user the flexibility to run small, full tonnage dies on a large press while maintaining part quality and extending die life.

Iron has 2.5 to 4.5 times the dampening capability of steel. Therefore, the PM4 utilizes castings in all of its beds, slides, uprights and crowns to dampen vibration and noise created in high vibration and highsnap-thru applications.

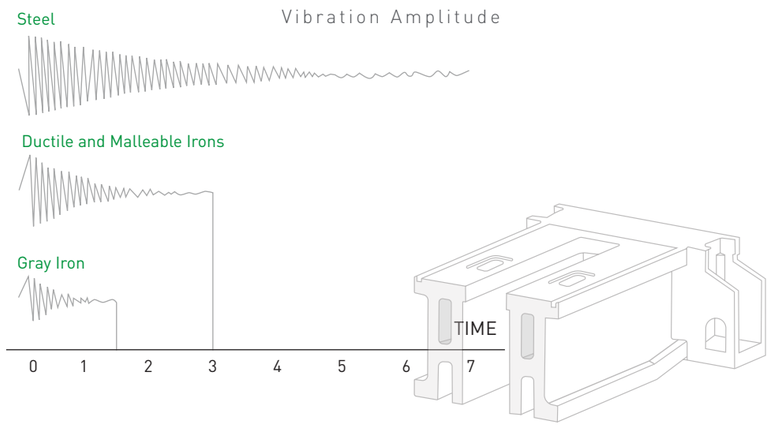

Large Tie Rod Nuts

All PM4 presses have large tie rods with rolled threads. Rolled threads are capable of handling up to three times the load of standard cut threads. This added capability is essential in the event of an overload situation.

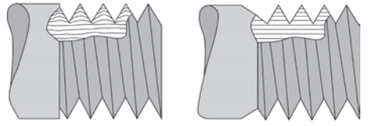

Rolled Threads

Cut Threads

Wide Upright Openings

Large upright openings allow feeding of wide material.

Minster Patented VibCoach

Production Vibration Severity Monitoring System provides a continuous "real-time" identification of the long term die & press reliability level. The VibCoach is recommended for presses with normal operations above 200 SPM and can be used with any die operating within the press. VibCoach advises the press operator or production supervisor of any changes in production vibration severity caused by changes in production speed, material, and/or die setup. The VibCoach includes the StatusAlert™ console mounted light tower which provides a quick visual indication of the vibration reliability level during production.

Standard Features

Patented Minster Hydraulic Clutch and Brake Unit

Minster's combination hydraulic clutch and brake produces the maximum torque possible providing for faster starting and stopping. A patented segmented drive disc design provides safe and reliable operation, variable clutch torque and easy maintenance.

Segmented friction material allows for easy replacement without removal of the clutch and brake discs. In addition, Minster's clutch and brake unit requires no adjustment, resulting in less downtime and higher production rates.

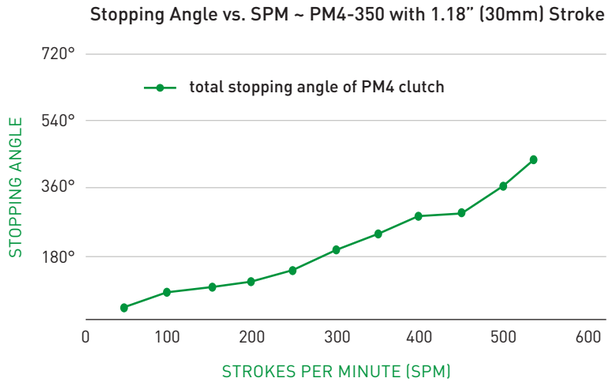

The Minster combination hydraulic clutch and brake provides the ability to single stroke at high rates while simultaneously providing unparalleled stopping time ability that is critical for high speed and in-die sensing applications.

Lower Deflection & Greater Flexibility

Standard presses are designed to have a bed deflection of 0.0015" to 0.002" per foot (0,125 to 0,167 mm/m) when full-rated tonnage is distributed over two-thirds of the bed. In addition, the slide deflection of a standard press will be approx. 1.5 times more than the bed deflection.

As shown, the PM4 has been designed with extremely low deflection providing the ability to run tighter punch-to-die clearance, as well as the flexibility to run small, full tonnage dies on a large press while maintaining part quality and die life.

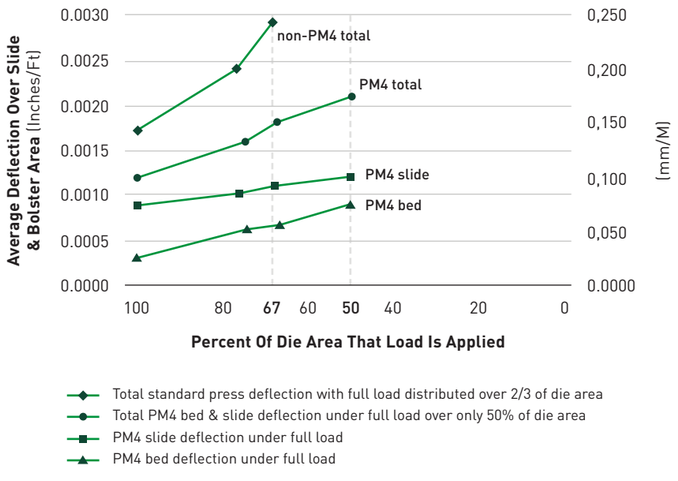

Eight-Point Hydrostatic/ Hydrodynamic Gibbing For Precision Slide Guiding

The PM4 slide guiding system incorporates both hydrostatic and hydrodynamic bearing technology. This combination of technologies provides:

- Greater resistance to off-center loading than either standard oil film or roller bearing guided gibs.
- Extreme overload capacity for shock loading.
- Centering of slide in a static condition.

Hydrostatic Gib Monitoring

This system will top stop the press if the gibs' clearance is closed-in due to a set up problem or other issue. The hydrostatic gib monitoring system is comprised of twelve pressure transducers positioned in the lubrication circuit to sense the gib pressure on both the main and auxiliary gibs.

The Basics of Hydrostatic / Hydrodynamic Technology

Twelve, separate, hydrostatic pads are machined into the extra-wide gib surfaces of the PM4. When an off-center force attempts to tip the slide, the oil pressures at these pads change independently to offset the force and maintain exceptional slide parallelism.

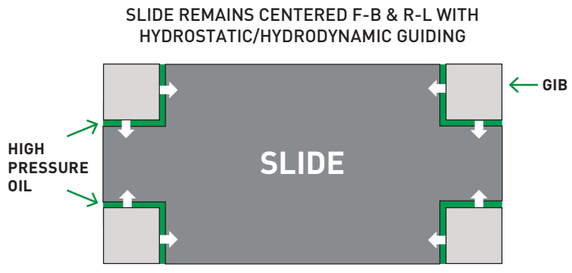

Standard Features

Full Wrist Pins

Full wrist pins, supplied with high-pressure oil, provide superior snap-thru ratings with reduced wear and deflection. The high tensile stiffness of this design results in improved bottom-dead-center repeatability along with reduced die punch penetration which are critical during high tensile blanking operations. In a snap-thru condition, a wrist pin is subjected to pure shear forces while the connection is only subjected to simple tension forces. Comparatively, when a ball and socket design is subjected to snap-thru, in addition to the shear and tension forces, the ball bushing and retainer are also subjected to bending moments which create a more severe stress situation.

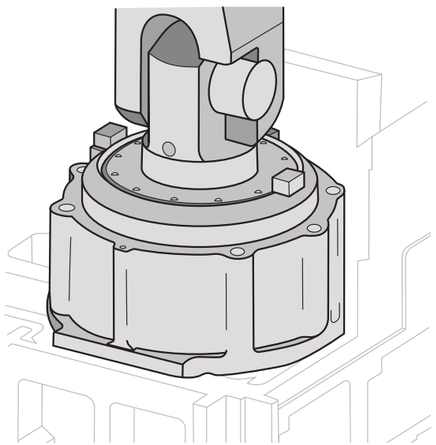

Eccentric Shaft

The throw-to-throw accuracy of Minster's onepiece forged eccentric shaft is within ±0.0005" (0,0127 mm) to provide superior dynamic parallelism that results in increased die life in close tolerance dies. Eccentric shafts provide more accuracy and higher rigidity than eccentric gears or crankshafts, and they have approximately 33% more load bearing area and less deflection than a standard crankshaft. This design significantly increases the press's ability to handle snap-thru forces as compared to a crank shaft or eccentric gear design.

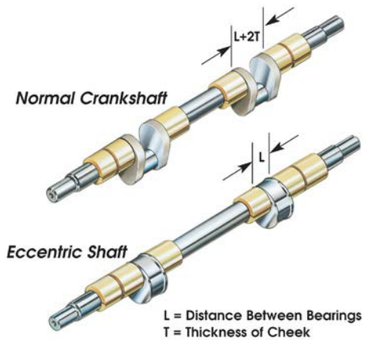

Reverse Load Rating

The combination of the PM4's hydrodynamic drive bearings, forged eccentric shaft, heavy ductile connections, full wrist pins, and slide adjustment screws with hydraulic locked buttress threads, provide the PM4 with a reverse load rating two to four times that of standard presses. This high rating minimizes punch penetration and provides increased capability for blanking and piercing applications.

Hydrodynamic Drive Bearings

Advantages of Hydrodynamic Bearings:

- Indefinitely long life with full film lubrication.
- High load capacity.
- Load capacity and stiffness increase w/speed.
- Extreme overload capacity for shock loading.
- High vibration dampening.
- Replacement involves only limited disassembly.

Roller Bearing Weaknesses:

- Statistically predictable limited life.
- Shock load capacity no greater than static load capacity.
- Severe overloads produce brinelling.
- Replacement involves extreme disassembly.

Quick Access Feature

The Quick Access feature on Minster PM4 presses enables easy access to the die. Advantages of this feature include:

- Allows the user to raise the slide 3" (75mm) providing quick and easy access to thread material, inspect the die or release material.
- Eliminates the need for hydraulic tie rod nuts.
- After use, mechanical stops ensure the slide is returned to the exact shutheight position and parallelism that it maintained prior to use. This is not possible with a screw-type mechanism.
- Allows the user to select a press with the minimum stroke length for the application without sacrificing the operator's ability to inspect or change tooling. Utilizing a shorter stroke length minimizes the slide velocity resulting in reduced impact loading, reduced tool vibration, increased tool life and increased production speeds.
- The pressurized quick lift chamber provides a preload exceeding the press tonnage.

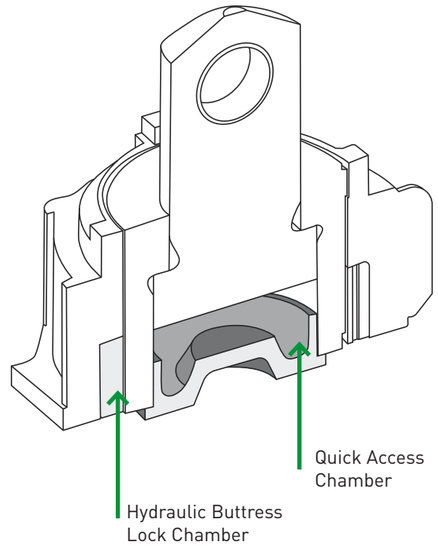

Hydraulic Locking

Clearance in the slide adjustment screw and nut mechanism are eliminated by compression of the nut diameter with high pressure oil. This reduces vibrations resulting from snap-thru forces during blanking, improves die life, and eliminates the possibility of the slide adjustment "creeping" under load.

Motorized Slide Adjustment

The slide adjustment on the PM4 is driven by a hydraulic motor connected to hardened worm shafts with zero backlash couplings and is supported on anti-friction bearings. The adjustment mechanism includes a shock mounted electronic resolver to display and adjust shutheight on the press console.

Standard Features

Monitored Lubrication With Variable Frequency Regulation

All main and connection bearings have full film lubrication with pressurized oil supplied to each bearing from within the crankshaft. This system is designed to stop the press in the event of reduced oil pressure thereby preventing damage to the machine. A variable speed lube pump motor with pressure transducer feedback maintains constant oil pressure through plant ambient and press temperature variations. The consistent oil film gives the ultimate dynamic bearing stiffness and longevity resulting in better bottom-dead-center repeatability and longer die life.

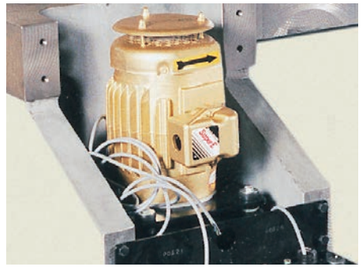

Lube motor pump assembly mounted in right hand rear press bed leg.

Hydraulic motor pump assembly mounted in left hand rear press bed leg.

Flywheel Drive Arrangement for Maximum Efficiency

The Minster PM4 Series presses are flywheel type presses running at higher speeds for punching, notching, and blanking operations on lamination materials. The clutch and brake unit is mounted on the eccentric shaft and the flywheel rotates on anti-friction bearings.

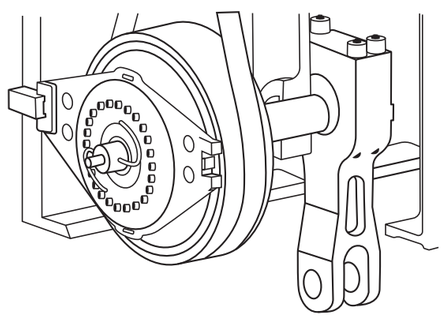

Drive Motor

The PM4 variable frequency main drive motor is totally enclosed, fan cooled, variable speed and provides proven durability and increased torque response to offer these benefits:

- Simplified control unit for easy troubleshooting
- Interchangeable controller
- Belt pull will not affect internal motor bearings

Dynamic Balancing

The Dynamic Balancing System on the PM4 greatly reduces the effect of the slide inertia forces caused by running at high speeds. This reciprocating balancer helps maintain precise slide bottom-dead-center repeatability resulting in less die wear and greater part accuracy. It also allows the press to run at higher speeds and reduces press vibration.

FieldHawk - i4.0

FieldHawk is a cloud-based mobile application designed to communicate with your Nidec stamping press lines from your iOS or Android mobile devices. Cloud-based, secured communications allows all authorized users to check machinery status from anywhere you can get phone service and/or an internet connection, thus reducing downtime.

Crankshaft Extension

Minster provides as standard, one crankshaft extension opposite the drive side of the PM4. This extension is available to drive the user's auxiliary equipment such as feeds, scrap cutters, or mechanical die indexers.

Production Management Control (PMC)

Incorporates all press functions including:

- Full machine diagnostics detailing all press and feed line faults.
- Multiple selectable languages.
- Open architecture which allows for greater convenience in planning and maintenance.
- PLC and color touch screen technology; all press and feed line functions can be monitored for efficient diagnosis of production line faults.

Available popular options include: die protection, load monitoring as well as automatic shutheight and counterbalance controls.

Additional Standard Features

- Die Area Guarding
- Control Pedestal Located on Feed Side
- Pedestal-Mounted Control Station
- Pedestal-Mounted Run Station
- Press Stop Control Buttons Mounted on Each Upright
- (2) Press Top Stop Control Buttons (One each on front and rear)
- 16-Pole Programmable Limit Switch
- Non-Reversing Drive Motor Starter

Optional Features

Adjust-In-Motion

- Allows micro-adjustment of the shutheight while running.
- Accurate change feedback
- Helps maintain bottom-dead-center repeatability.

Automatic Shutheight Adjustment

Will automatically set the shutheight to the predetermined tool storage value, reducing setup time. Manual shutheight adjustment can still be achieved via the operator's input on the control.

Available Popular Options:

- Coil line interconnects
- Additional part blow-off valve
- Sliding set-up station
- Additional tool storage
- Die protection with Auto tune technology
- Load Monitoring
- Automatic shutheight and adjust-in-motion control

Nidec PRESS & AUTOMATION

One Brand: A World of Resources

Nidec Press & Automation is the full service pressroom provider of choice for businesses in more than 90 countries and on six continents. Comprised of leading press room product brands, we ensure a complete offering of machinery, services and technology to meet your exact needs, enabling you to rely on one source.

Discover the freedom to achieve, to maximize and to drive your operation to exceed your goals. At Nidec Press & Automation, your success is the core of our focus and how we design our solutions to meet the rigid needs of the metal forming industry.

Choosing to work with us means you gain a constant resource with a global footprint, the brightest minds behind our solutions, and backed by regionally based OEM support ready to work as a natural extension of your team.

Our promise to you is simple:
We're with you whenever and wherever business takes you.

MACHINERY
Turn Key Systems
Individual Components
System/Tech Upgrades
i4.0 Software Upgrades
Integrated Controls

METAL FORMING PRESS APPLICATIONS
Mechanical
Servo
Transfer
Notching
High-Speed & Electrical
Electrical Vehicle (EV)
Lamination
Container Cupping
Container End-Conversion
Container Shell
Gap/D-Frame

AUTOMATION
Press Tending / Robotics
Integrated Transfer Systems
High Speed Servo Feeds
High Speed Gripper Feeds
Heavy-Duty Coil Lines

GLOBAL SERVICE NETWORK
Field Service
Emergency Response
Technical Service & Support
OEM Replacement Parts
Machine & Component Remanufacturing
Technical Training

Specifications & Dimensions

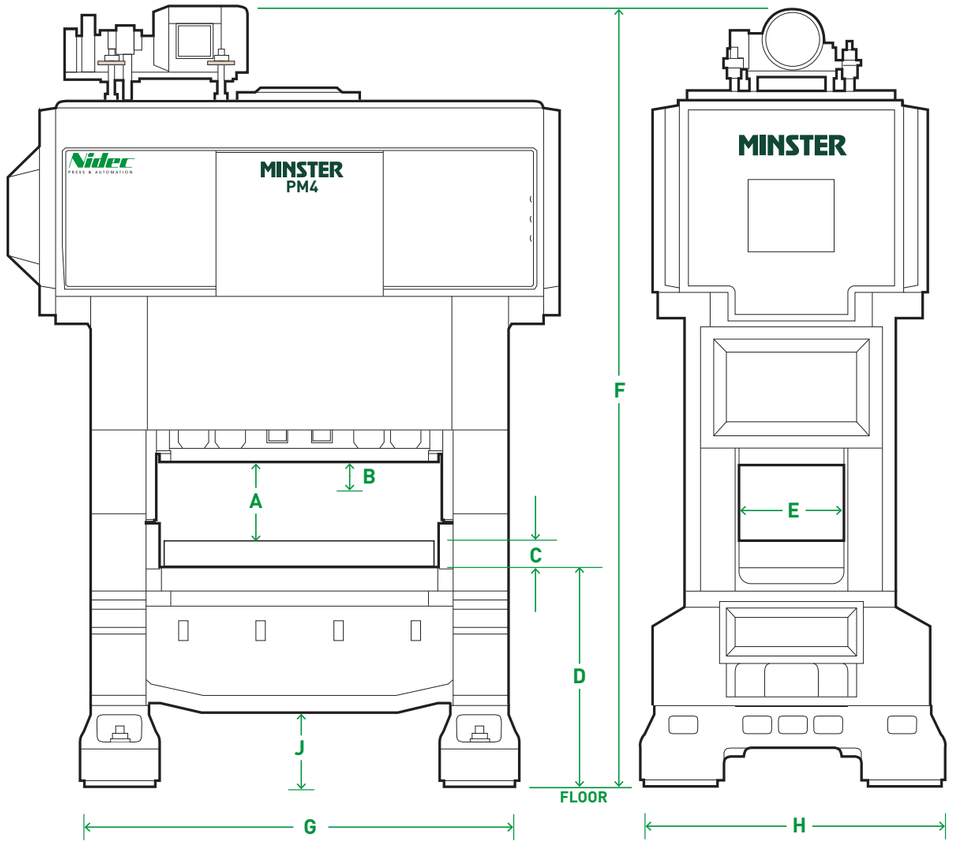

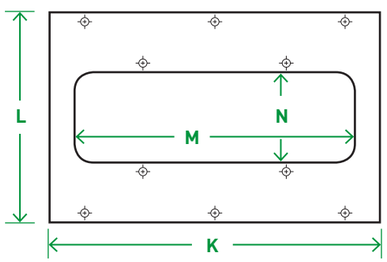

		PM4-250		PM4-350		PM4-450		PM4-600	
	Drive Type	Flywheel Drive		Flywheel Drive		Flywheel Drive		Flywheel Drive	
	Tons Capacity	250 @ 0.06" off bottom 2225 kN @ 1,6mm		350 @ 0.06" off bottom 3100 kN @ 1,6mm		450 @ 0.06" off bottom 4000 kN @ 1,6mm		600 @ 0.06" off bottom 5350 kN @ 1,6mm	
	Slide Stroke vs. Speed	Stroke	Max. Speed	Stroke	Max. Speed	Stroke	Max.Speed	Stroke	Max.Speed
		1.18" 30 mm	100-535	1.18" 30 mm	100-525	1.18" 30 mm	100-450	1.18" 30 mm	90-350
		1.38" 35 mm	100-490	1.38" 35 mm	100-475	1.38" 35 mm	100-400	1.38" 35 mm	90-300
		1.57" 40 mm	100-450	1.57" 40 mm	100-425	1.57" 40 mm	100-375	1.57" 40 mm	90-275
	Quick Access Slide Travel	2.95" ~ 75 mm		2.95" ~ 75 mm		2.95" ~ 75 mm		2.95" ~ 75 mm	
E	Upright Opening	27.5" ~ 700 mm		27.5" ~ 700 mm		41.5" ~ 1054 mm		47.5" ~ 1200 mm	
KxL	Area of Bolster and Slide (R-L x F-B)	86.6 x 43.3" 2200 x 1100 mm		86.6 x 47.5" 2200 x 1205 mm		100.5 x 55.1" 2555 x 1400 mm		120.0 x 59.0" 3050 x 1500 mm	
				120.0 x 47.5" 3050 x 1205 mm		120.0 x 55.1" 3050 x 1400 mm			
MxN	Opening in Bolster (R-L x F-B)	74.8 x 15" 1900 x 380 mm		74.8 x 15" 1900 x 380 mm		86.6 x 18.5" 2250 x 470 mm		108.25 x 20.5" 2750 x 520 mm	
				108.2 x 15.0" 2750 x 380 mm		106.2 x 18.5" 2700 x 470 mm			
	Opening in Bed (R-L x F-B)	77.0 x 14.5" 1850 x 370 mm		77.0 x 14.5" 1950 x 370 mm		90.6 x 20.5" 2300 x 520 mm		110.25 x22.5 2750 x 570 mm	
				110.2 x 14.5" 2800 x 370 mm		110.2 x 20.5" 2800 x 520 mm			
	Flywheel Energy	22 In. Tons @ 100 SPM .063" (*1,6mm) off bottom		22 In. Tons @ 100 SPM .063" (*1,6mm) off bottom		28 In. Tons @ 75 SPM .063" (*1,6mm) off bottom		38 In. Tons @ 65 SPM .063" (*1,6mm) off bottom	
	Max. Upper Die Weight	2200 Lbs. ~ 1000 kg		2200 Lbs. ~ 1000 kg		2640 Lbs. ~ 1200 kg		4840 Lbs ~ 2200 kg	
	Main Bearing Diameter	8.5" ~ 215 mm		8.5" ~ 215 mm		9.5" ~ 240 mm		11.0" ~ 280 mm	
A	Shutheight Range on Bolster (S.D.A.U.)	10.83 to 17.72" 275 to 450 mm	14.76 to 21.65" 375 to 550 mm	10.83 to 17.72" 275 to 450 mm	14.76 to 21.65" 375 to 550 mm	10.83 to 18.70" 275 to 475 mm	14.76 to 22.64" 375 to 575 mm	13.0 x 23.23" 330 to 590 mm	
B	Shutheight Adjustment	6.88" ~ 175 mm		6.88" ~ 175 mm		7.87" ~ 200 mm		10.25" ~ 260 mm	
C	Bolster Thickness	7.09" ~ 180 mm		7.09" ~ 180 mm		7.87" ~ 200 mm		9.06" ~ 230 mm	
D	Floor to Top of Bed (with Spring Mounts)	61.0" ~ 1550 mm		61.0" ~ 1550 mm		77.0" ~ 1955 mm		82.0" ~ 2085 mm	
J	Bed Clearance to Floor (with Spring Mounts)	23.0" ~ 585 mm		23.0" ~ 585 mm		33.0" ~ 840 mm		31.0" ~ 785 mm	
F	Overall Height (with Spring Mounts)	235" 5970 mm	239" 6070 mm	235" 5970 mm	239" 6070 mm	282" 7150 mm	286" 7250 mm	307" 7800 mm	
G	Floor Space (R-L)	138.0" ~ 3505 mm		138.0" ~ 3505 mm		161.0" ~ 4090 mm		181.0" ~ 4595 mm	
H	Floor Space (F-B)	95.0" ~ 2415 mm		95.0" ~ 2415 mm		108.3" ~ 2750 mm		122.0" ~ 3100 mm	
	Approximate Weight	151,000 Lbs. 68.500 kg		151,000 Lbs. 68.500 kg		265,000 Lbs. 120.200 kg		350,000 Lbs. 158.800 kg	
				171,000 Lbs. 78.000 kg		295,000 Lbs. 129.500 kg			

Nidec
PRESS & AUTOMATION

One Brand: A World of Resources

A single source solution that will help you find the efficiencies you want — all from the products, services and technology of Nidec Press & Automation.

nidecpa.com