E2 Flywheel Brake Facing Upgrade

This package replaces the previous style flywheel brake facing with an updated unit with a larger facing for increased brake facing life.

Benefits:

- Reduced costs as a result of less maintenance and fewer brake facing changes.

Package Includes:
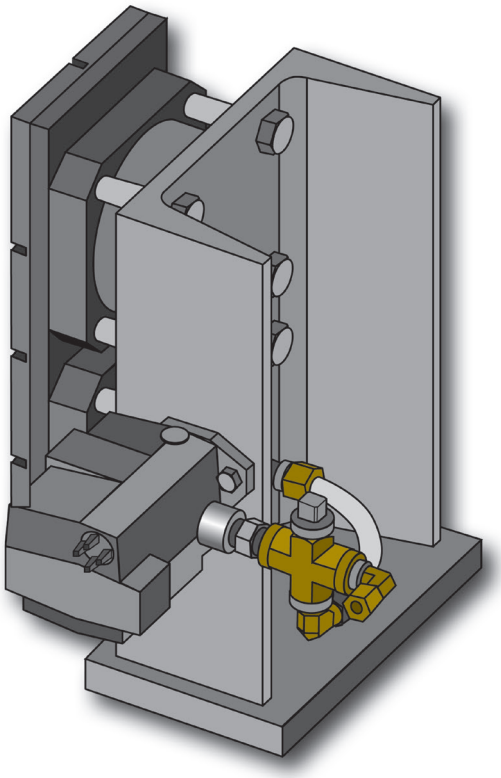
- Brake Pistons and Rings
- Facing Back Plate and Hardware
- Large Brake Facing
- Mounting Bracket
- Valves and Fittings (As Needed)
- Pneumatic Diagram
- Installation Instructions